8’ Economy Table Throw

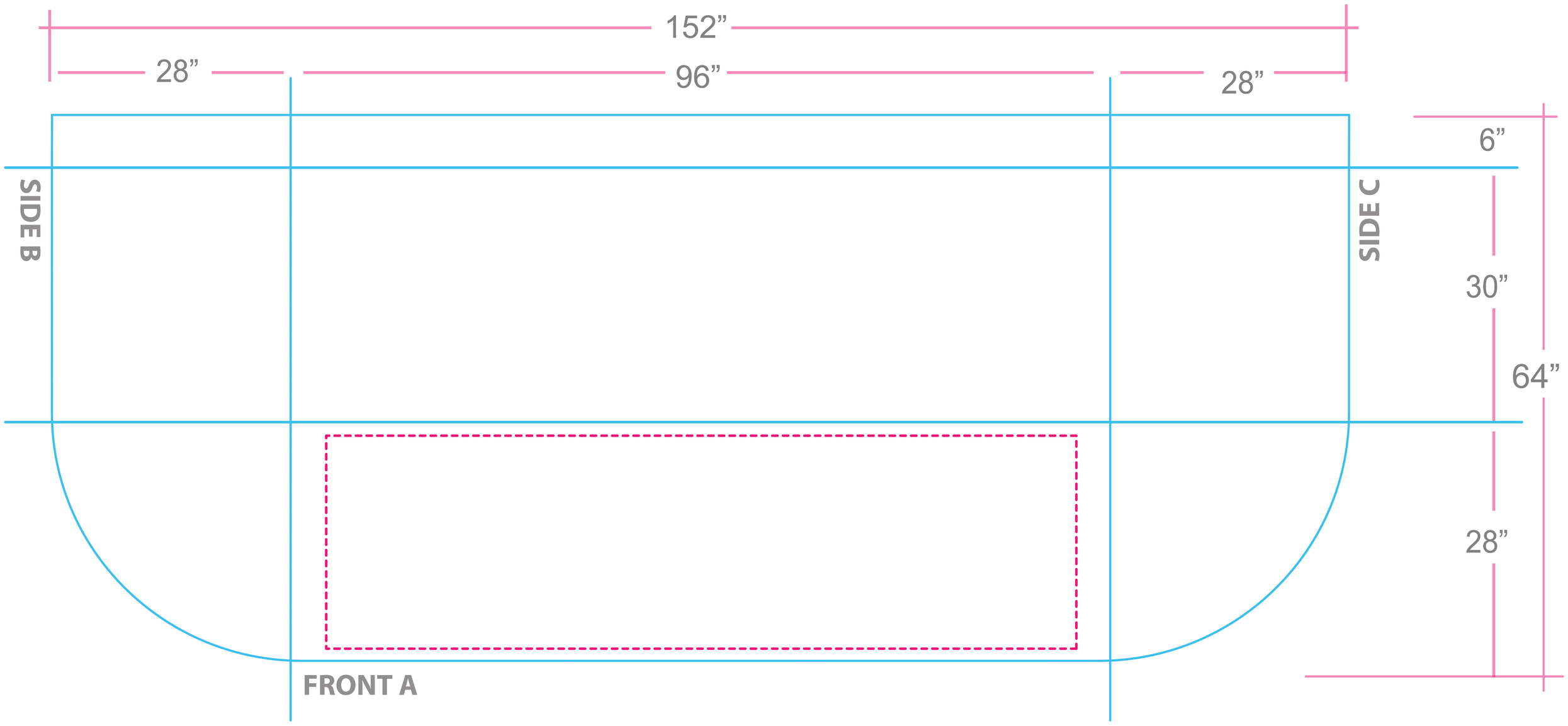

FINAL SIZE: 152 X 64
LIVE AREA: 88 X 25

For full instructions on file preparation, including software requirements and FTP upload please visit:

http://www.american-image.com/products/submit.shtml