6’ Economy Table Throw

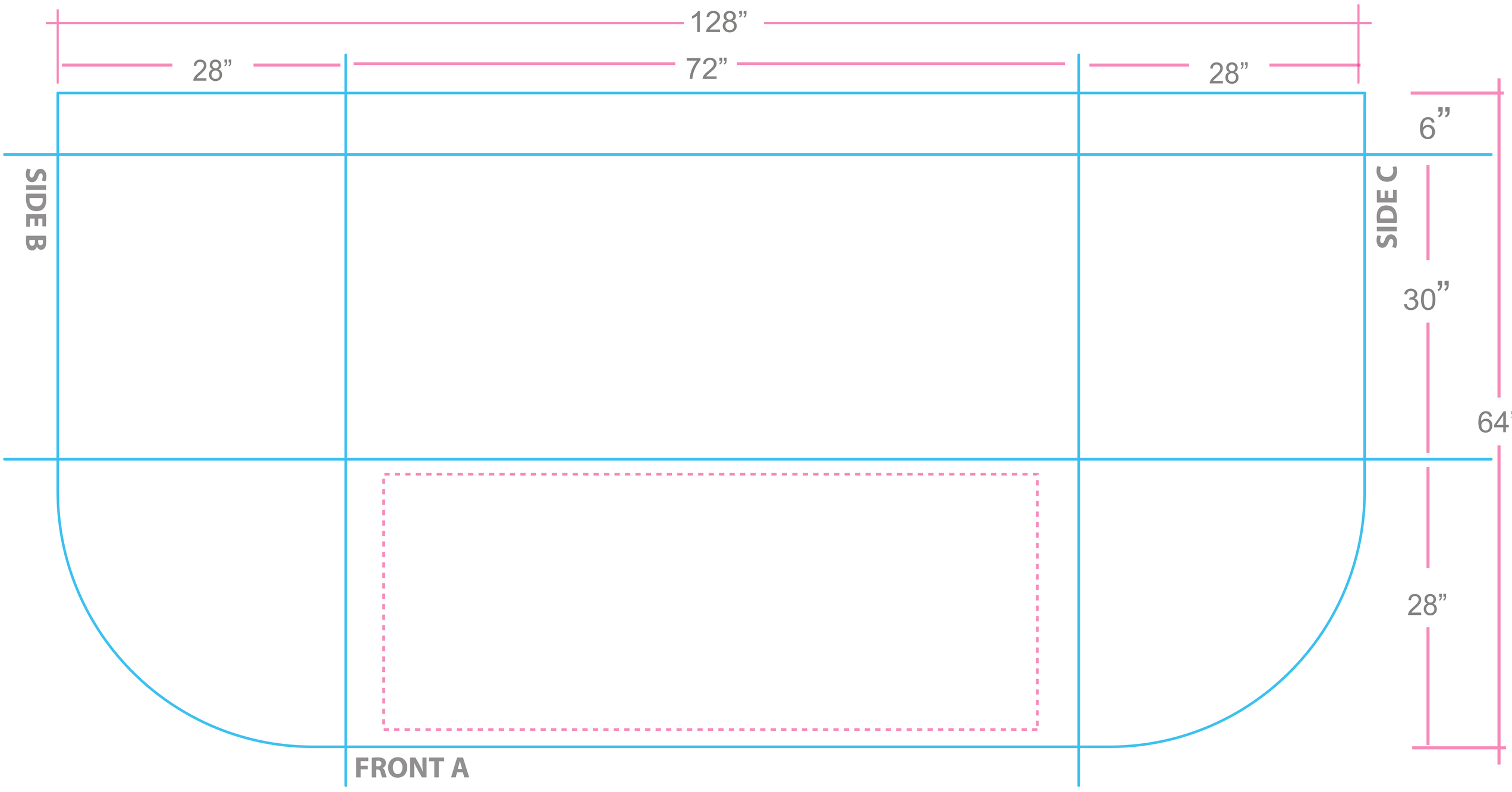

FINAL SIZE: 128 X 64

LIVE AREA: 64 x 25

For full instructions on file preparation, including software requirements and FTP upload please visit:

http://www.american-image.com/products/submit.shtml