LUMALINE™ Counter assembly

American image displays
www.american-image.com

2 x Frames
1 x Tabletop
2 x Shelves
4 x Lamps
1 x Sheet

1.

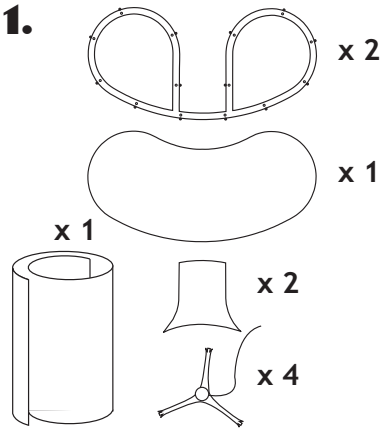

2. Mounting the sheet, step 1

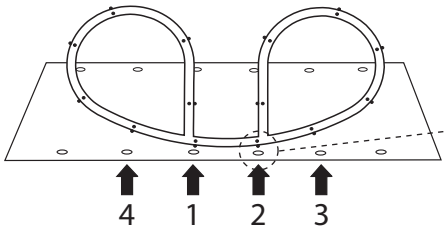

Click sheet onto these 4 pegs

3.

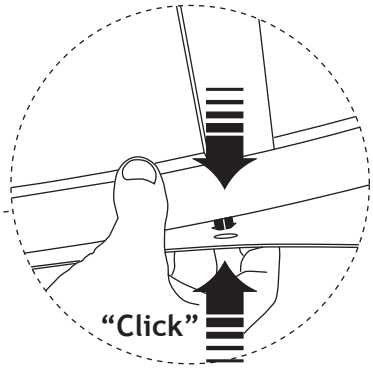

4. Mounting the sheet, step 2

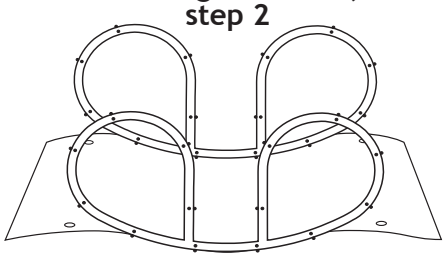

Click sheet onto same 4 pegs on second frame

5. Mounting the sheet, step 3

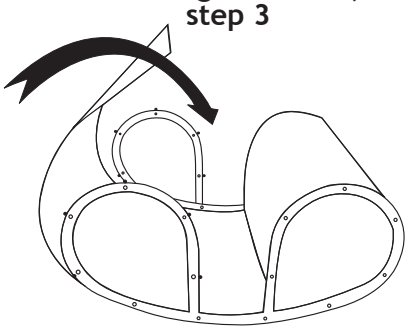

Continue by clicking on the rest of the pegs

6. Mounting 4 lamps, 2 at top and 2 at bottom

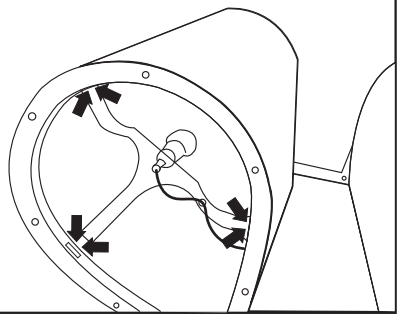

7. Mounting of 2 shelves

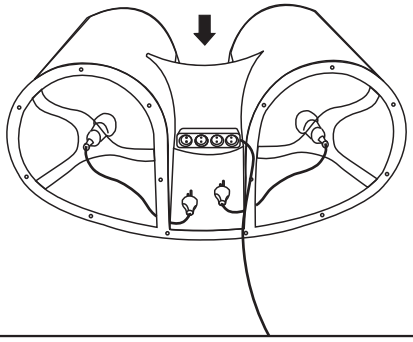

8. Plug in 4 sockets

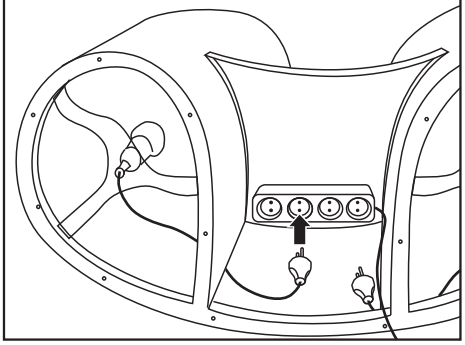

9. Position tabletop: alignment is correct when magnets click together

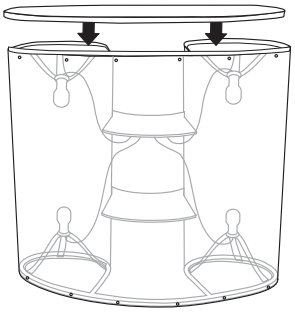

800-676-3976 • 425-556-9511 • fax 425-556-9611 • 4054 148th Ave. NE • Redmond, WA 98052